ANBAUANLEITUNG

mounting instructions • instructions de montage • instrucciones de montaje • istruzioni di montaggio

FBL.07.945.20000

beinhaltet • contains • contient • contiene • contiene

FBL.07.945.10000

FSC.07.945.10001

SW-MOTECH®

Item number: **FBL.07.945.10000**	Revision: **01** · Date: **02 - 2024**

Brake pedal

~ 0.5 h.	EASY DIFFICULT

ENGLISH ·Thank you for choosing this premium product from SW-MOTECH. Visit our online shop for more information (e.g. model assignments). Required documents (e.g. national type approval) are available there for you to download.

Please read and understand all the instructions, safety information and warnings in these mounting instructions before mounting and using the product in order to avoid injury and damage. Keep these mounting instructions for reference.

This product was developed for vehicles in factory condition. Compatibility with original accessories or accessories from other manufacturers cannot be guaranteed.

These mounting instructions have been prepared to the best of our current knowledge. No legal claims relating to accuracy can be made. Errors and omissions excepted. We reserve the right to make technical and design changes. The copyright is held by SW-MOTECH.

SAFETY WARNING SYMBOL

⚠ **This warning symbol is used in these mounting instructions to warn of deadly dangers, injuries or other hazards. The words DANGER, WARNING or CAUTION are used as part of this warning symbol to convey important safety messages and information relating to the installation and use of this product. These words, together with the safety warning symbol, mean:**

⚠ **DANGER:** Indicates a hazardous situation which, if not avoided, will result in death or serious injury!

⚠ **WARNING:** Indicates a hazardous situation which, if not avoided, may result in death or serious injury!

⚠ **CAUTION:** Indicates a hazardous situation which, if not avoided, may result in minor or moderate injury!

⚠ ***NOTE:*** Important information, but not relating to a risk of death or injury (property damage only)!

GENERAL INFORMATION

⚠ **WARNING: Assembly and/or maintenance of this product requires advanced technical skill, appropriate tools, and a good understanding of tool usage and torque specifications. For your own safety, SW-MOTECH recommends having the assembly and/or maintenance carried out by a qualified and certified motorcycle workshop.**

⚠ **WARNING: If you do choose to assemble this product yourself, carefully and fully read the mounting instructions before assembly and use, and follow all instructions to avoid serious injury or death. Also observe all relevant information in the vehicle manual when mounting or using the product. IF YOU DO NOT UNDERSTAND ANY PART OF THESE MOUNTING INSTRUCTIONS OR NEED AN EXPLANATION AS TO A SPECIFIC INSTRUCTION, DO NOT ATTEMPT TO INSTALL THIS PRODUCT WITHOUT CONSULTING SW-MOTECH FOR ASSISTANCE!**

PREPARATION: Read the mounting instructions carefully and make sure that all parts on the parts list are available.

⚠ **CAUTION: Ensure that your vehicle is standing securely. Switch off the engine and remove the ignition key. Allow the engine/exhaust to cool down if necessary. Disconnect the battery when working on the electrical system. Only use proper tools and always wear safety goggles and gloves during assembly and maintenance. Have a second person help you with assembly and maintenance.**

ASSEMBLY: All parts and connections removed from the vehicle must be reinstalled according to the vehicle manufacturer's specifications or replaced with parts and hardware supplied by SW-MOTECH.

⚠ **WARNING: Secure all threads with a medium-strength liquid threadlocker, unless otherwise specified.**

⚠ **DANGER: Tightening torques not defined by SW-MOTECH must be obtained from the vehicle manufacturer or a certified motorbike workshop.**

FUNCTIONAL CHECK: After mounting the product, ensure that no moving parts are obstructed and that the function of the vehicle is not impeded. Cables and hoses must not rub against each other and/or be hindered in any way.

⚠ **WARNING: Carry out a comprehensive functionality check before you start to drive. Check the tightening torque of all connections and the tight fit of the product after the first 50 km and then at regular intervals. Mounted accessories can change the handling and stability of the vehicle.**

SW-MOTECH GmbH & Co. KG
Ernteweg 7-10
35282 Rauschenberg
Germany

info@sw-motech.com
www.sw-motech.com

The content translation is automated.
© SW-MOTECH GmbH & Co. KG

Errors and omissions excepted
Subject to technical and design changes.

Take note of the symbols and what they mean in the ASSEMBLY section. If the term OEM appears in the ASSEMBLY section, the vehicle manufacturer's specifications must be observed and applied.

If you have any questions, please don't hesitate to contact our Customer Service team or our distributors. You can find our telephone number and a list of our distributors in our online shop:
www.sw-motech.com

Do not use thread lock: Indicates that no liquid thread lock should be used at this point.

Tighten/note the tightening torque information: Indicates the tightening torque of a part specified by SW-MOTECH or the vehicle manufacturer (OEM).

Use thread locker: Indicates that a thread must be coated with liquid thread locker. H (HIGH): high strength; M (MEDIUM): medium strength; L (LOW): low strength.

The content translation is automated.
© SW-MOTECH GmbH & Co. KG

Errors and omissions excepted
Subject to technical and design changes.

3

1	2	3	4	5	6
FBL.07.945.900.01.03	FBL.00.127.003.36	M6 x 50; DIN 912 SC.ST.06.050.01.912.088	M6; DIN 985 MU.ST.06.01.985.08	FBL.07.945.002.03	M5 x 16; ISO 7380 SC.ST.05.016.02.7380.109
1/1	**1**/1	**1**/1	**1**/1	**1**/1	**2**/2

7	8
FBL.07.945.003.03	M5 x 10; DIN 7991 SC.ST.05.010.45.7991.088
1/1	**2**/2

The content translation is automated.
© SW-MOTECH GmbH & Co. KG

Errors and omissions excepted
Subject to technical and design changes.

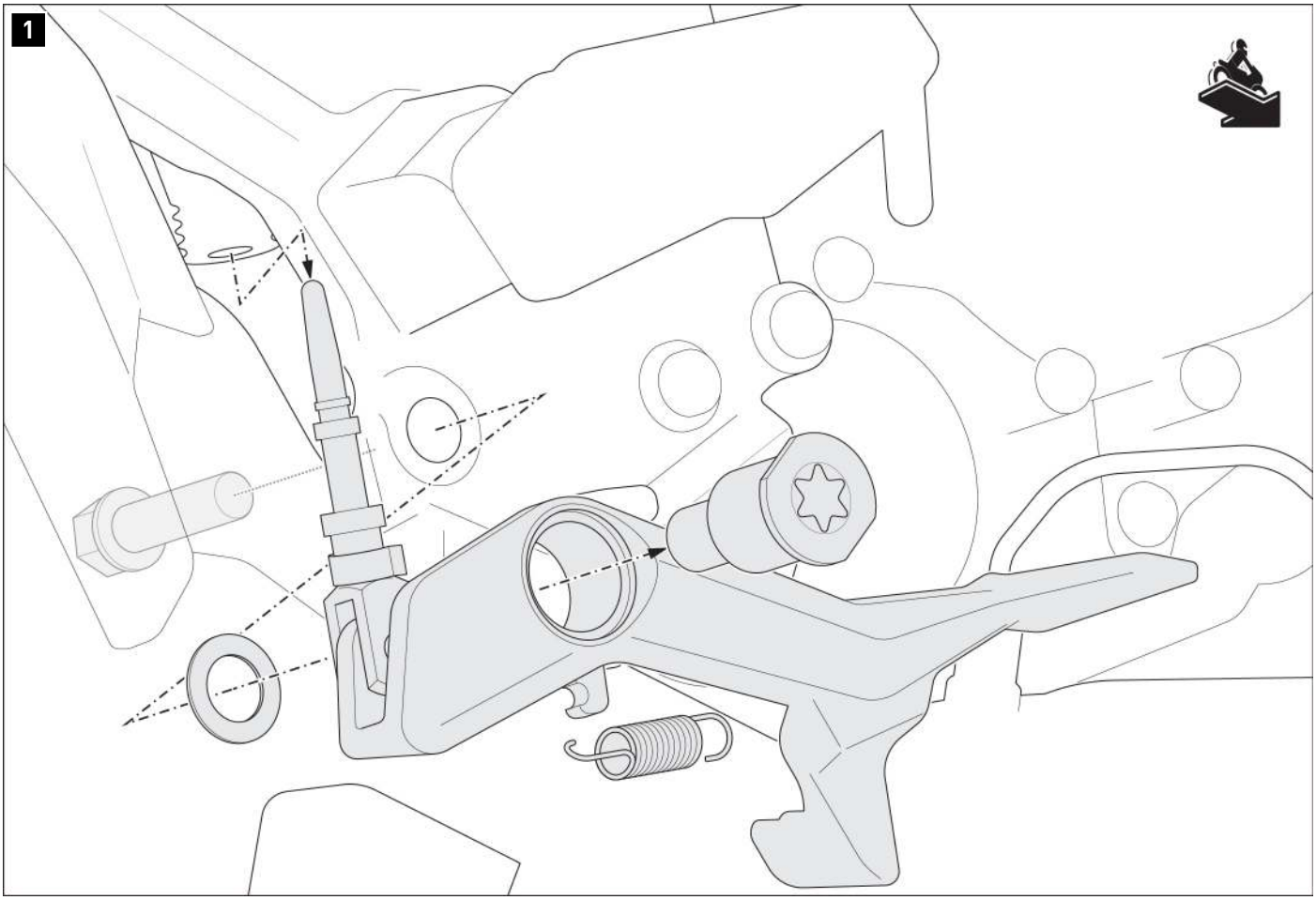

⚠ DANGER: A brake pedal is a safety-relevant attachment! For your safety, SW-MOTECH recommends that installation and/or maintenance MUST be carried out by a qualified and certified specialist workshop!

⚠ WARNING: Always wear eye and hand protection!
⚠ WARNING: Always use the proper tools!

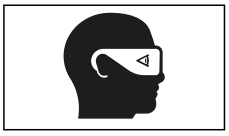

⚠ ***NOTE:*** *Before disassembling the original brake pedal, note the order and orientation of the original parts.*

Unscrew the original brake lever screws. Leave the internal screw at the attachment point and do not remove it from the footrest mount.
Then release the spring from the original brake lever and remove it from the vehicle.

The content translation is automated.
© SW-MOTECH GmbH & Co. KG

Errors and omissions excepted
Subject to technical and design changes.

2

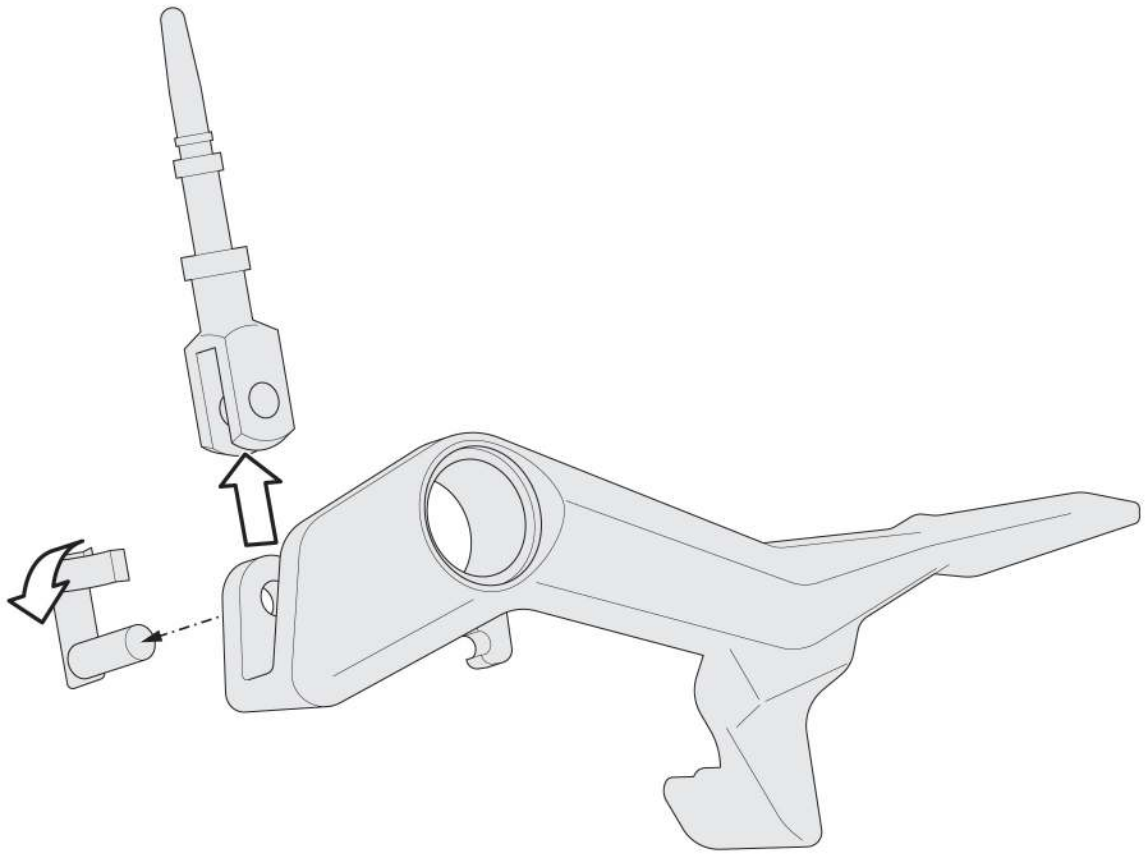

Loosen the pressure rod safety bolt (push it down and pull it out) and remove it from the original brake lever.

The content translation is automated.
© SW-MOTECH GmbH & Co. KG

Errors and omissions excepted
Subject to technical and design changes.

3

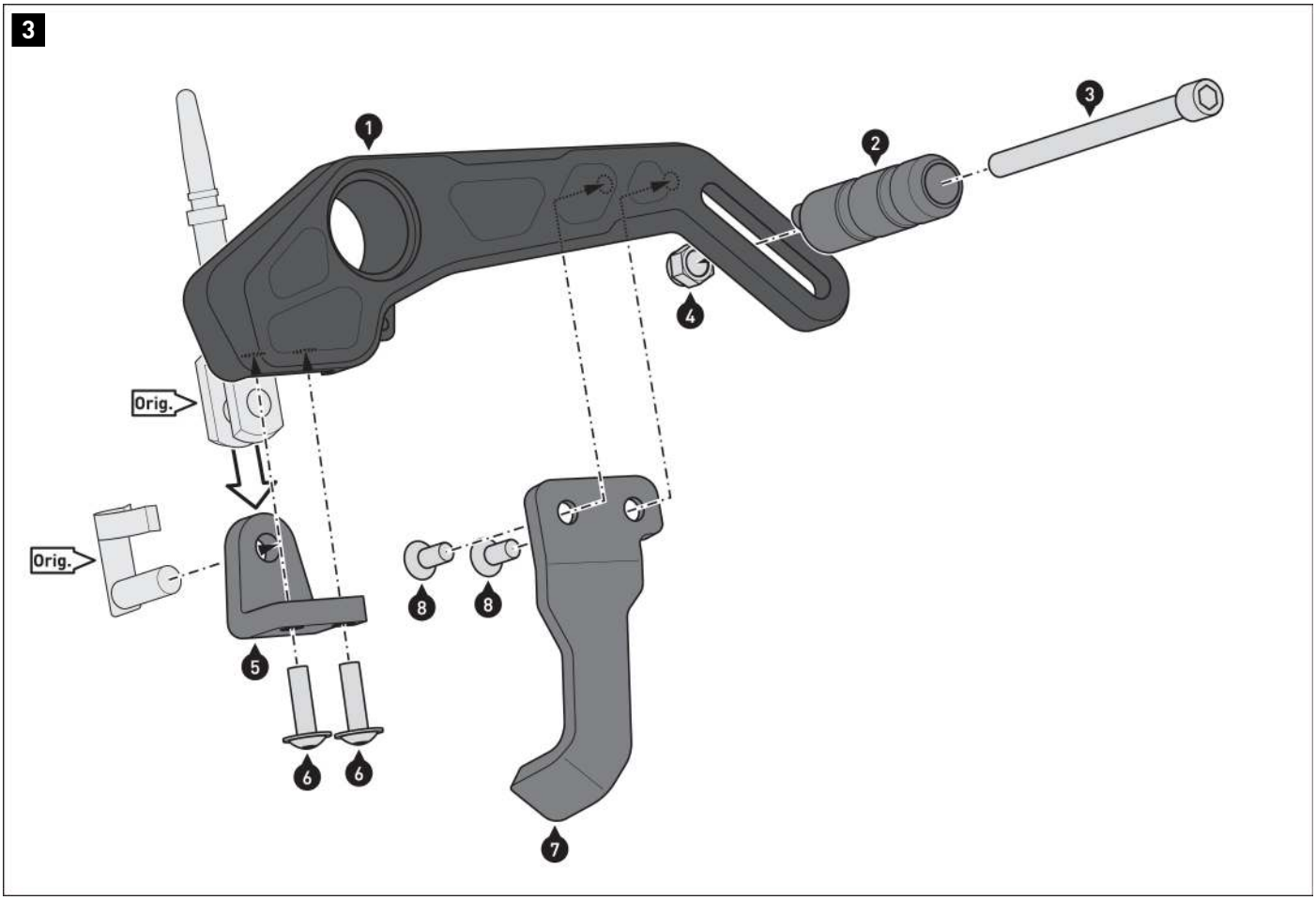

Screw the parts shown together.
⚠ WARNING: Use liquid thread locker (screws (6) and (8))!
Do not tighten the screw (3) yet.
Tighten the screws (6) and (8) as specified in the mounting instructions.

Attach the original pressure rod (Orig.) with the original safety bolt (Orig.) on the mounting bracket (5).
Make sure to secure the safety bolt (Orig.) as it was originally.

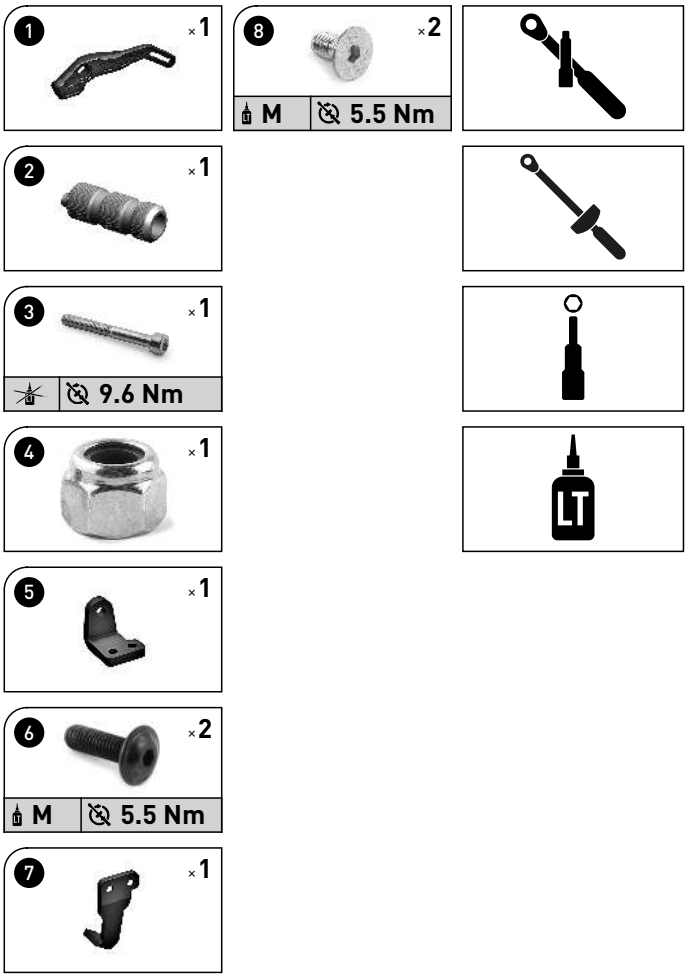

The content translation is automated.
© SW-MOTECH GmbH & Co. KG

Errors and omissions excepted
Subject to technical and design changes.

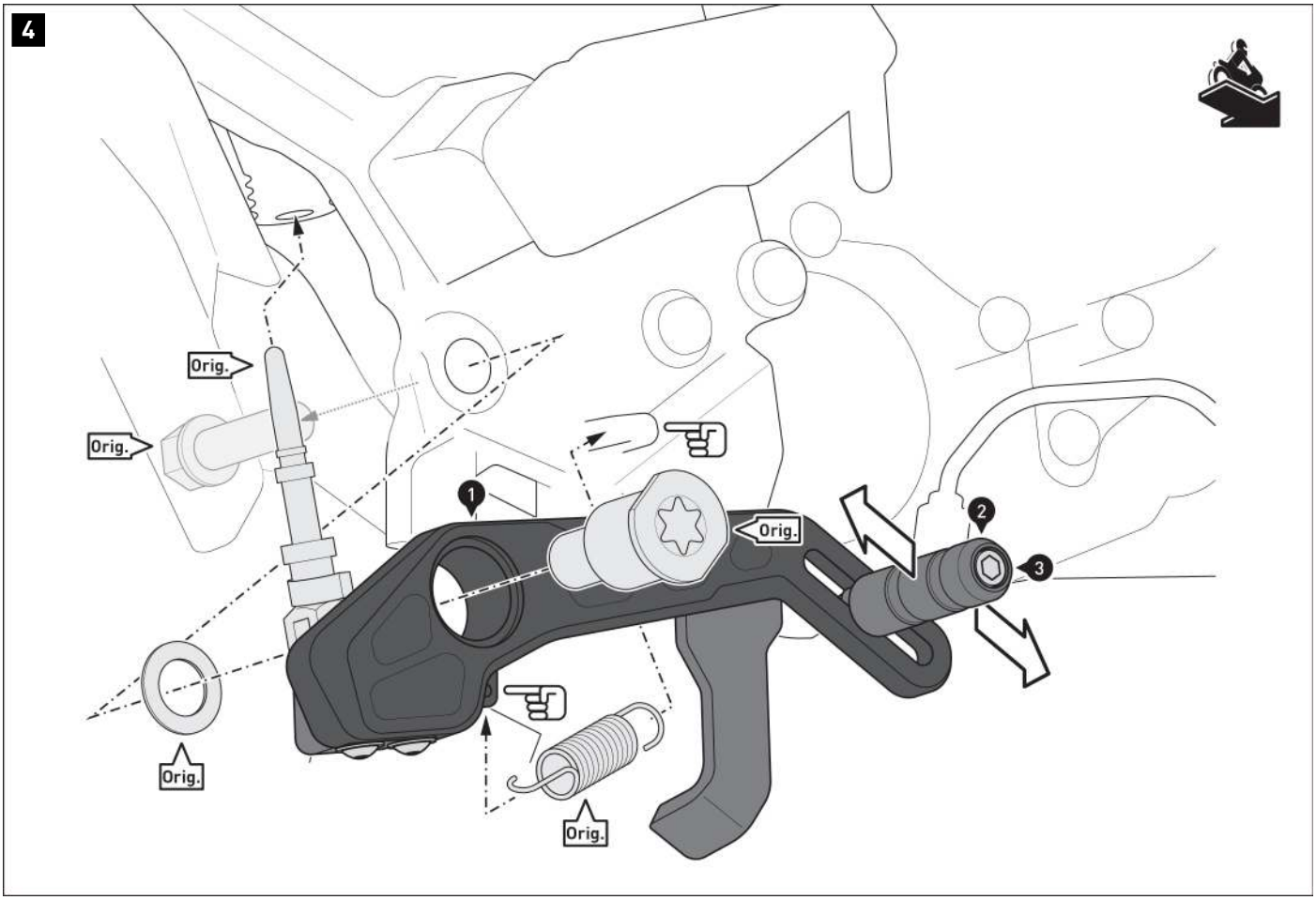

Insert the original pressure rod (Orig.) into the master brake cylinder.

Screw the brake lever to the vehicle using the original parts (Orig.).
⚠ WARNING: Make sure to insert the ends of the original spring (Orig.) into the brake lever openings(1)!
⚠ WARNING: Use a liquid threadlocker!
Tighten the original (Orig.) screws according to the manufacturer's instructions.

Adjust the pedal (2) according to your driving habits.
then tighten the screw (3) as specified in the mounting instructions.

The content translation is automated.
© SW-MOTECH GmbH & Co. KG

Errors and omissions excepted
Subject to technical and design changes.

PRODUCT-SPECIFIC NOTES

⚠ DANGER: Finally, have a comprehensive functional check of your vehicle's brake system carried out by a qualified and certified specialist workshop!
⚠ WARNING: The cornering and ground clearance may be restricted by this product in the case of extreme inclination!
⚠ *NOTE: Observe the country-specific regulations for registering/operating your vehicle or the applicable TÜV regulations. Have parts subject to registration entered in the vehicle documents by your inspection authority after installation.*

If a national type approval is available for this product:
You must always carry the national type approval supplied with the product with you! This national type approval only applies to the models listed and must comply with all requirements! For use with a vehicle not listed here, the entry must be made in the vehicle documents!
The vehicle assignments in the national type approval document are expanded annually. As a result, the national type approval for a new product may only take place a few months after the market launch. If your model is not listed or if you no longer have the national type approval document, please visit the Download section of our web shop. The current version of the national type approval document will be available there.

© SW-MOTECH GmbH & Co. KG

Errors and omissions excepted
Subject to technical and design changes.

Art.-Nr. / Item No.: **FSC.07.945.10001** Revision: **00** · Datum / Date: **02 - 2023**

Schalthebel

Gear lever

DEUTSCH - Vielen Dank, dass Sie sich für dieses Premium-Produkt von SW-MOTECH entschieden haben. Bitte besuchen Sie unseren Webshop für weitere Informationen wie Modellzuweisungen und PDF-Anbauanleitung. Erforderliche Dokumente (z. B. ABE) stehen als Download zur Verfügung.

Die Montage und/oder Wartung dieses Produkts erfordert ein gutes technisches Verständnis! Zu Ihrer eigenen Sicherheit empfiehlt SW-MOTECH, die Montage und/oder Wartung durch eine Fachwerkstatt durchführen zu lassen! SW-MOTECH übernimmt keine Haftung für Schäden, die durch eine unsachgemäße Montage und/oder Wartung verursacht wurden!
Beachten Sie alle in der Anbauanleitung angegebenen Hinweise und die für die Montage relevanten Informationen im Fahrzeughandbuch. Nichtbeachtung kann zu Schäden am Fahrzeug bzw. zur Gefährdung des Fahrers führen! Diese Anbauanleitung ist nach unserem derzeitigen Kenntnisstand verfasst worden. Rechtliche Ansprüche auf Richtigkeit bestehen nicht.

Dieses Produkt wurde für Fahrzeuge im Werkszustand entwickelt. Die Kompatibilität mit Original-Zubehörteilen bzw. den Zubehörteilen anderer Hersteller kann nicht gewährleistet werden. Stellen Sie des Weiteren VOR Montage dieses Produkts sicher, dass sich alle beweglichen Teile (z. B. die Kette) im ursprünglichen Wartungszustand befinden. Montiertes Zubehör kann das Fahrverhalten und/oder die Stabilität Ihres Fahrzeugs verändern.

ENGLISH - Thank you for choosing this premium product from SW-MOTECH. Please visit our webshop for additional information, such as application charts and PDF mounting instructions. Any other documents that may be required (e.g. ABE certifications), are also available for download at our webshop.

Installation and/or maintenance of this product require good technical understanding! For your own safety SW-MOTECH recommends having installation and/or servicing carried out by a specialist workshop! SW-MOTECH assumes no liability for damage caused by improper installation and/or maintenance work!
Carefully follow all the directions given in the mounting instructions and pay attention to all relevant information in the vehicle manual during assembly. Nonconformance can lead to vehicle damage or even endanger the driver! These mounting instructions are written based on our current state of knowledge. Legal requirements for accuracy do not exist.

This product was developed for vehicles in their factory setting. Compatibility with original accessory parts or other manufacturers' accessory parts is not guaranteed. Furthermore, BEFORE installing this product, make sure that all moving parts (e.g. the chain) are in the original state of maintenance. Installed accessories can change the driving behaviour and/or stability of your vehicle.

ALLGEMEINE HINWEISE

Beachten Sie die landesspezifischen Vorschriften für Zulassung/Betrieb Ihres Fahrzeugs bzw. anwendbare TÜV-Vorschriften. Lassen Sie eintragungspflichtige Teile nach Montage durch Ihre Prüfstelle in die Fahrzeugpapiere eintragen.

VORBEREITUNG: Lesen Sie die Anbauanleitung aufmerksam und stellen Sie sicher, dass alle Teile der Stückliste vorhanden sind. Achten Sie darauf, dass Ihr Fahrzeug sicher steht und nicht umfallen kann. Schalten Sie den Motor ab und ziehen Sie den Zündschlüssel. Lassen Sie ggf. den Motor/Auspuff abkühlen. Klemmen Sie bei Arbeiten an der Elektrik die Fahrzeugbatterie ab. Verwenden Sie geeignetes Werkzeug. Lassen Sie sich von einer zweiten Person helfen.

MONTAGE: Alle vom Motorrad gelösten Teile und Verbindungen sind gemäß den Fahrzeugherstellerangaben wieder zu montieren oder durch die von SW-MOTECH gelieferten Teile zu ersetzen. Sichern Sie, falls nicht anderweitig definiert, alle Gewinde mit mittelfester, flüssiger Schraubensicherung.
Alle nicht durch SW-MOTECH definierten Anzugsmoment-Vorgaben müssen beim Fahrzeughersteller oder einer Fachwerkstatt erfragt werden!

FUNKTIONSKONTROLLE: Stellen Sie nach der Montage sicher, dass alle zuvor gelösten Teile und Verbindungen wieder ordnungsgemäß montiert wurden. Achten Sie außerdem auf die uneingeschränkte Freigängigkeit und einwandfreie Funktion sämtlicher Fahrzeugteile. Kabel, Züge und Schläuche dürfen nicht scheuern und/oder geklemmt werden. Führen Sie vor Fahrtbeginn eine umfassende Funktionskontrolle durch. Überprüfen Sie nach den ersten 50 km und anschließend in regelmäßigen Abständen das Anzugsmoment aller Schraubverbindungen und den ordnungsgemäßen Sitz des Produkts.

GENERAL INFORMATION

Observe the country-specific regulations concerning vehicle registration/operation as well as TÜV regulations if applicable. If required, register installed parts in the vehicle documents through an appropriate inspection authority.

PREPARATION: Read the mounting instructions carefully and make sure that all items of the parts list are included. Make sure that your vehicle is parked safely and cannot fall over. Turn off the engine and remove the ignition key. Let the motor/exhaust cool off if necessary. Disconnect the vehicle battery when working on the electrical system. Use appropriate tools. Have another person to help you.

MOUNTING: All parts and connections removed from the vehicle must be reinstalled in accordance with the vehicle manufacturers' specifications or replaced by parts delivered by SW-MOTECH. Secure all threads, unless otherwise specified, with medium-strength liquid thread locker.
Torque specifications undefined by SW-MOTECH must be obtained from the vehicle manufacturer or by a specialist workshop!

FUNCTION CHECK: After installation make sure that all parts and connections previously removed are properly replaced. Also make sure that no moving parts are obstructed and no function of the vehicle is hindered in any way. Cables and hoses must not rub and/or be pinched. Before starting to ride, perform a comprehensive check of all functions. After the first 50 km and then at regular intervals, check the tightening torque of all screw connections and the proper fit of the product.

PRODUKTSPEZIFISCHE HINWEISE

ACHTUNG: Die Kurven- und Bodenfreiheit kann bei extremer Schräglage durch dieses Produkt eingeschränkt werden!

ACHTUNG: Stellen Sie nach Montage des Schalthebels sicher, dass die Freigängigkeit aller Komponenten im Montagebereich gewährleistet ist! Schalten Sie alle Gänge durch und stellen Sie sicher, dass die Justierung des Schalthebels Ihrer Fahrergonomie entspricht!

PRODUCT SPECIFIC INFORMATION

ATTENTION: While cornering at extrem lean angles, ground clearance can be reduced by using this product!

ATTENTION: After installation of the gear lever ensures that the clearance of all components is unobstructed! Check all gears and make sure that the adjustment of the gear lever is accorded to your driving ergonomics!

Konfektionierung durch / Packed by:	Datum der Konfektionierung / Date of packaging:

SW-MOTECH®

SW-MOTECH GmbH & Co. KG
Ernteweg 7-10
35282 Rauschenberg
Germany

Tel. / phone + 49 (0)6425 / 8168 - 050
Fax / fax + 49 (0)6425 / 8168 - 10

info@sw-motech.com
www.sw-motech.com

Copyright by
SW-MOTECH GmbH & Co. KG

Irrtümer und Änderungen vorbehalten. Technische und Design-Änderungen vorbehalten.
Errors and omissions excepted. Technical and design modifications are subject to change.

STÜCKLISTE / PARTS LIST

Schritt Step	Nr. No.	Art.-Nr. / Bezeichnung [a] Item No. / Description [a]	Artikel	Part	Anzahl [b] Quantity [b]	N·m [c]
2	(1)	FSC.07.945.900.01	Schalthebel	Gear Lever	**1** /1	
	(2)	FSC.00.127.700	Auftritt	Pedal	**1** /1	
	(3)	M6 x 16; DIN 7991	Senkkopfschraube	Countersunk Screw	**1** /1	6
	(4)	M6; DIN 985	Mutter, selbstsichernd	Lock Nut	**1** /1	
3	(5)	FSC.07.945.002	Distanzbuchse; schwarz	Spacer; black	**1** /1	
4	(6)	FSC.00.127.011	Auftritt-Verlängerung	Pedal Extension	**1** /1	
	(7)	M6 x 25; DIN 912	Innensechskantschraube	Hexagon Socket Screw	**1** /1	6
	(8)	FSC.00.127.022	Gummihülse	Rubber Sleeve	**1** /1	

8.8	Regelgewinde / Coarse Thread **Ø**	**M4**	**M5**	**M6**	**M8**	**M10**	**M12**
	Stahl FK 8.8 / Steel CL 8.8 **N·m**	2,8	5,5	9,6	23	46	79

10.9	Regelgewinde / Coarse Thread **Ø**	**M4**	**M5**	**M6**	**M8**	**M10**	**M12**
	Stahl FK 10.9 / Steel CL 10.9 **N·m**	4,1	8,1	14	34	67	115

Anmerkungen: [a] Alle Maßangaben in Millimeter. [b] Der zweite Wert gibt die Gesamtanzahl des jew. Artikels in der Lieferung an. [c] **Keine Anzugsmomentvorgabe: Verwenden Sie das vom Fzg.-Hersteller definierte Anzugsmoment!** Das Std.-Anzugsmoment der Tabelle kann verwendet werden, wenn es den Fzg.-Hersteller-Vorgaben entspricht.

Note: [a] All measurements in millimeters. [b] The second number indicates the total quantity of the part in the delivery. [c] **No torque specifications: Use the torque defined by vehicle manufacturer!** The standard torque in this table can be used as long as it is within the vehicle manufacturer's specifications.

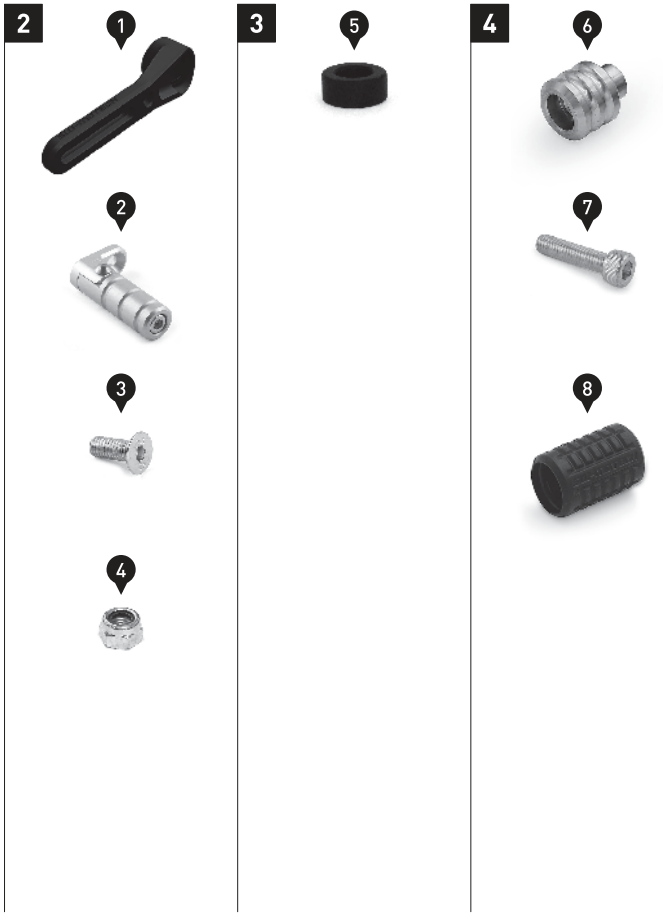

Copyright by
SW-MOTECH GmbH & Co. KG

Irrtümer und Änderungen vorbehalten. Technische und Design-Änderungen vorbehalten.
Errors and omissions excepted. Technical and design modifications are subject to change.

1

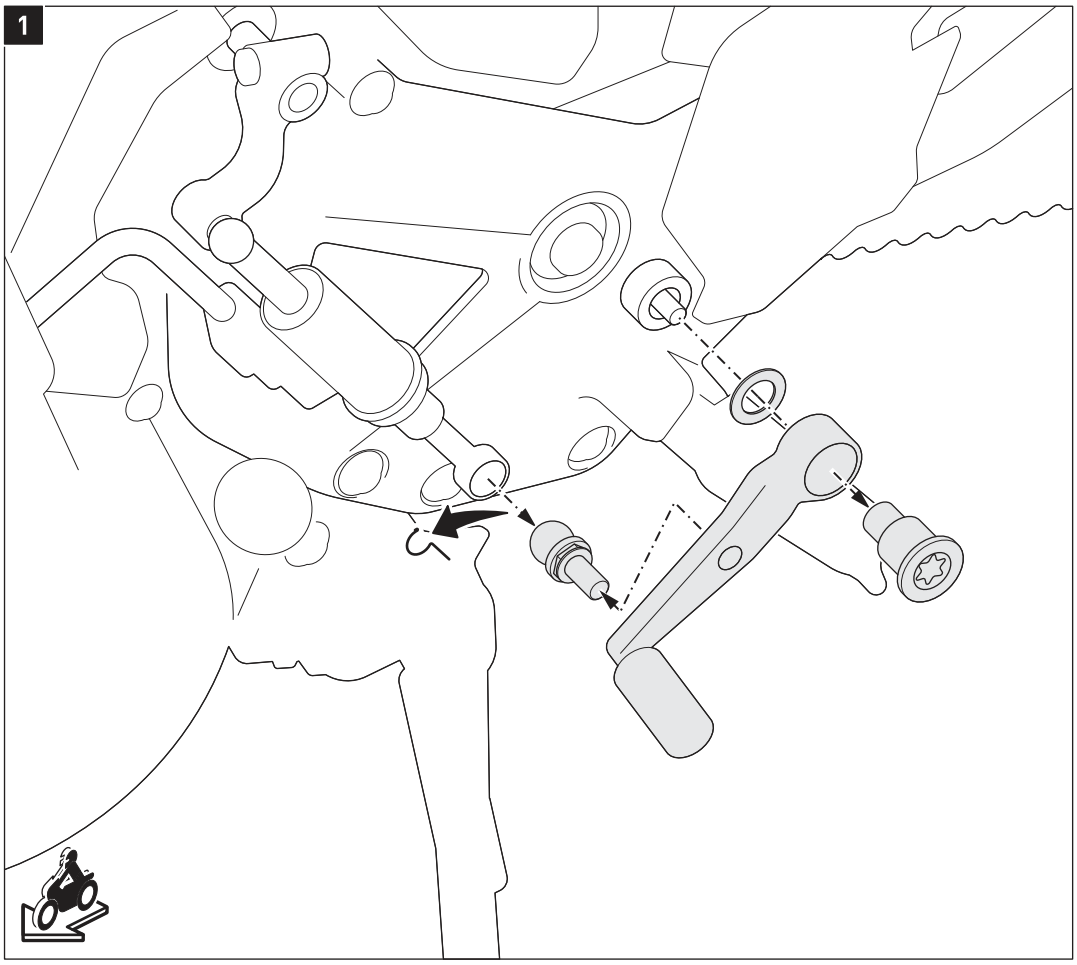

Entfernen Sie den Sicherungsstift vom original Schalthebel.

Entfernen Sie den original Schalthebel vom Fahrzeug, wie in der Zeichnung gezeigt.

Remove the security pin from the original gear lever.

Remove the original gear lever from the vehicle, as shown in the drawing.

2

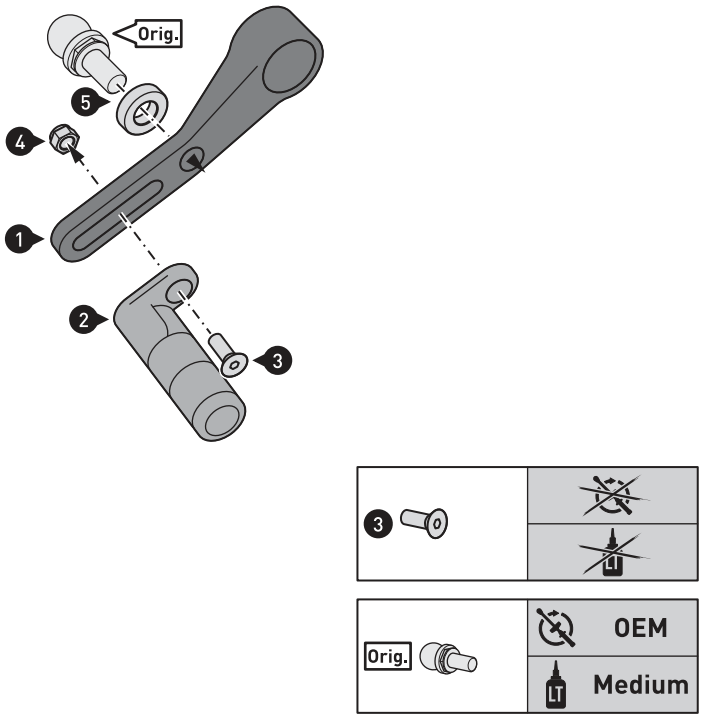

Verschrauben Sie die gezeigten Teile am Schalthebel (1), wie in der Zeichnung gezeigt.
Ziehen Sie die Schraube (3) noch nicht an.

Verschrauben Sie die original Schaltstangenaufnahme (Orig.) am Schalthebel (1), wie in der Zeichnung gezeigt.
ACHTUNG: Verwenden Sie flüssige Schraubensicherung!
Ziehen Sie die original Schaltstangenaufnahme (Orig.) nach Herstellerangaben an.

Attach the shown parts to the gear lever (1), as shown in the drawing. Do not fully tighten the screw (3) yet.

Attach the original selector rod retainer (Orig.) to the gear lever (1), as shown in the drawing.
ATTENTION: Use liquid thread locker!
Tighten the original selector rod retainer (Orig.) with the manufacturers' specified torque.

Copyright by
SW-MOTECH GmbH & Co. KG

Irrtümer und Änderungen vorbehalten. Technische und Design-Änderungen vorbehalten.
Errors and omissions excepted. Technical and design modifications are subject to change.

3

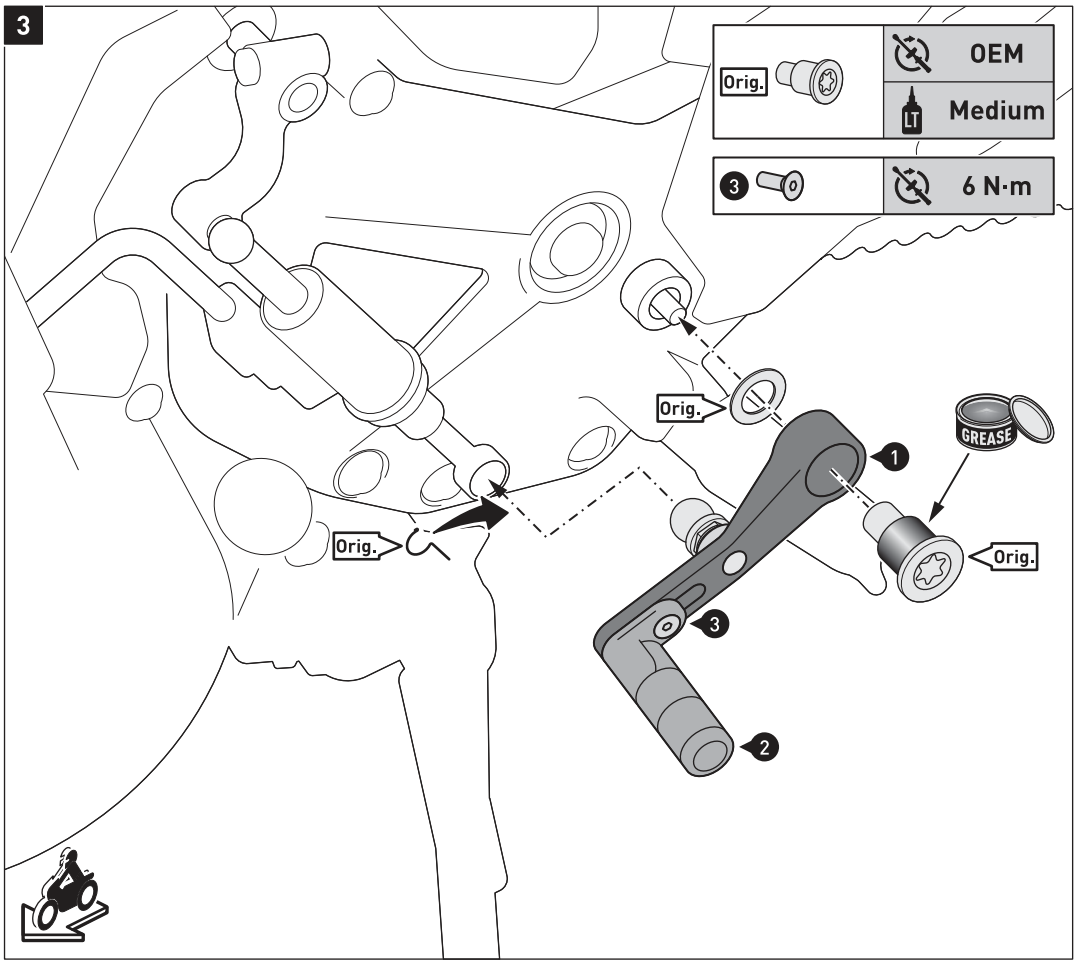

Bestreichen Sie die original Bundbuchse (Orig.) mit Fett, wie in der Zeichnung gezeigt.

Verschrauben Sie den Schalthebel (1) mit den original Teilen (Orig.) am Fahrzeug, wie in der Zeichnung gezeigt.
ACHTUNG: Verwenden Sie flüssige Schraubensicherung!
Ziehen Sie die Bundbuchse (Orig.) nach Herstellerangaben an.

Setzen Sie den original Sicherungsstift (Orig.) wie gezeigt ein.

Stellen Sie den Auftritt (2) entsprechend Ihrer Fahrgewohnheiten ein.
Ziehen Sie die Schraube (3) wie vorgegeben an.

Coat the original collar bush (Orig.) with grease, as shown in the drawing.

Attach the gear lever (1) with the original parts (Orig.) to the vehicle, as shown in the drawing.
ATTENTION: Use liquid thread locker!
Tighten the collar bush (Orig.) with the manufacturers' specified torque.

Insert the original security pin (Orig.) as shown.

Adjust the pedal (2) according to your driving ergonomics.
Tighten the screw (3), as specified.

4

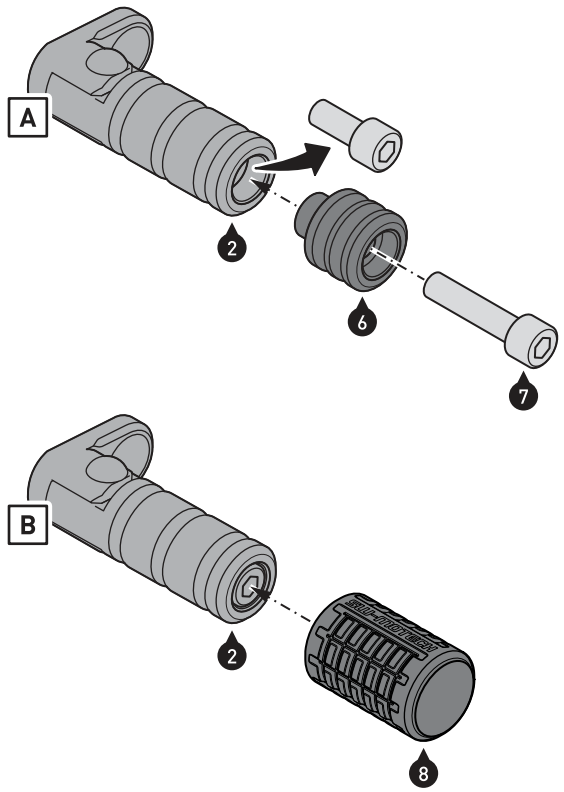

⚠ ***HINWEIS:*** *Dieser Montageschritt ist optional.*

Option [A]: Entfernen Sie die im Auftritt (2) vormontierte Schraube.

Verschrauben Sie die Auftritt-Verlängerung (6) mit dem Auftritt (2).
⚠ **WARNUNG: Verwenden Sie flüssige Schraubensicherung!**
Ziehen Sie die Schraube wie vorgegeben an.

Option [B]: Stülpen Sie die Gummihülse (8) über den Auftritt (2). Achten Sie darauf, dass die innenliegenden Ringe der Gummihülse (8) in den Vertiefungen des Auftritts (2) sitzen.

⚠ ***NOTICE:*** *This step is optional.*

Option [A]: Remove the pre-mounted screw from the pedal (2).

Screw the pedal extension (6) to the pedal (2).
⚠ **WARNING: Use medium-strength liquid thread locker!**
Tighten the screw as specified.

Option [B]: Place the rubber sleeve (8) over the pedal (2). Make sure that the inner rings of the rubber sleeve (8) are seated in the recesses of the pedal (2).

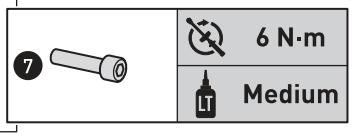

Copyright by
SW-MOTECH GmbH & Co. KG

Irrtümer und Änderungen vorbehalten. Technische und Design-Änderungen vorbehalten.
Errors and omissions excepted. Technical and design modifications are subject to change.